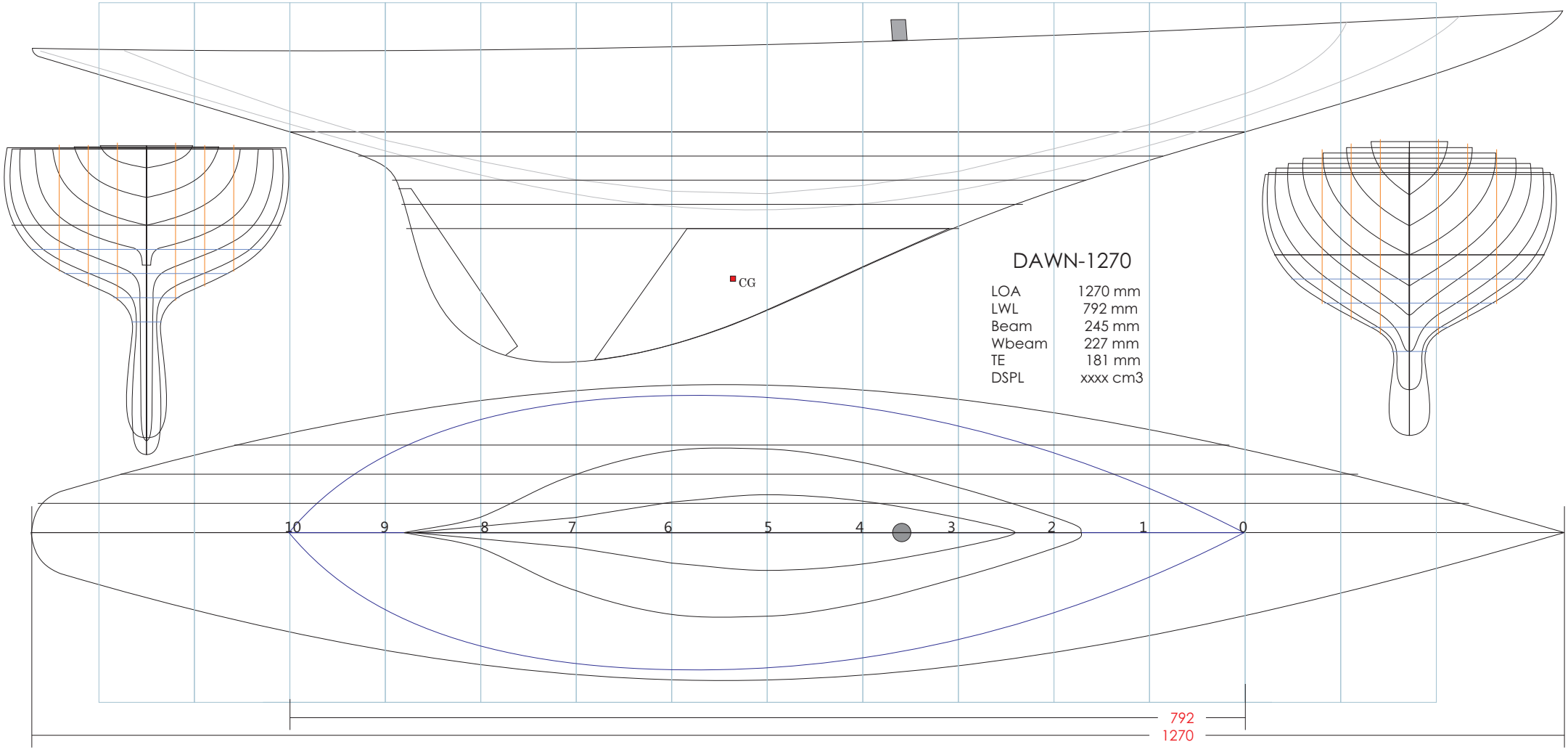

DAWN-1270

LOA	1270 mm
LWL	792 mm
Beam	245 mm
Wbeam	227 mm
TE	181 mm
DSPL	xxxx cm3